KALLISTA

Foundations by KALLISTA
Soft Modern Square Showerhead with Arm
P34250-00

Features
- Air-induction technology maximizes the air/water mix for a powerful, even flow
- 1.75 gpm (6.6 lpm) maximum flow rate
- High quality full brass construction for durability and reliability
- Single-function spray
- Easy-to-clean sprayface resists mineral buildup
- Wall-mount installation

Recommended Products/Accessories
P34231-LV Sink Faucet, Lever Handles
P34241-LV Single Control trim, lever handle
P34238-LV Freestanding Bath Faucet, Less Handshower
P34245-00 Towel Bar, 18"
P34248-00 Double Robe Hook

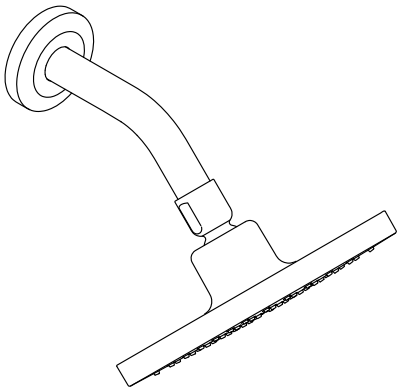

WaterSense Meets EPA Criteria
Certified by IAPMO R&T

Codes/Standards
ASME A112.18.1/CSA B125.1

KALLISTA® Five-Year Limited Warranty
See website for detailed warranty information.

Available Colors/Finishes
Color tiles intended for reference only.

Color	Code	Description
	CP	Polished Chrome
	BL	Matte Black
	BN	Brushed Nickel
	BAF	Brushed French Gold
	SN	Polished Nickel
	PGP	Polished Graphite

KALLISTA

Foundations by KALLISTA

Soft Modern Square Showerhead with Arm

P34250-00

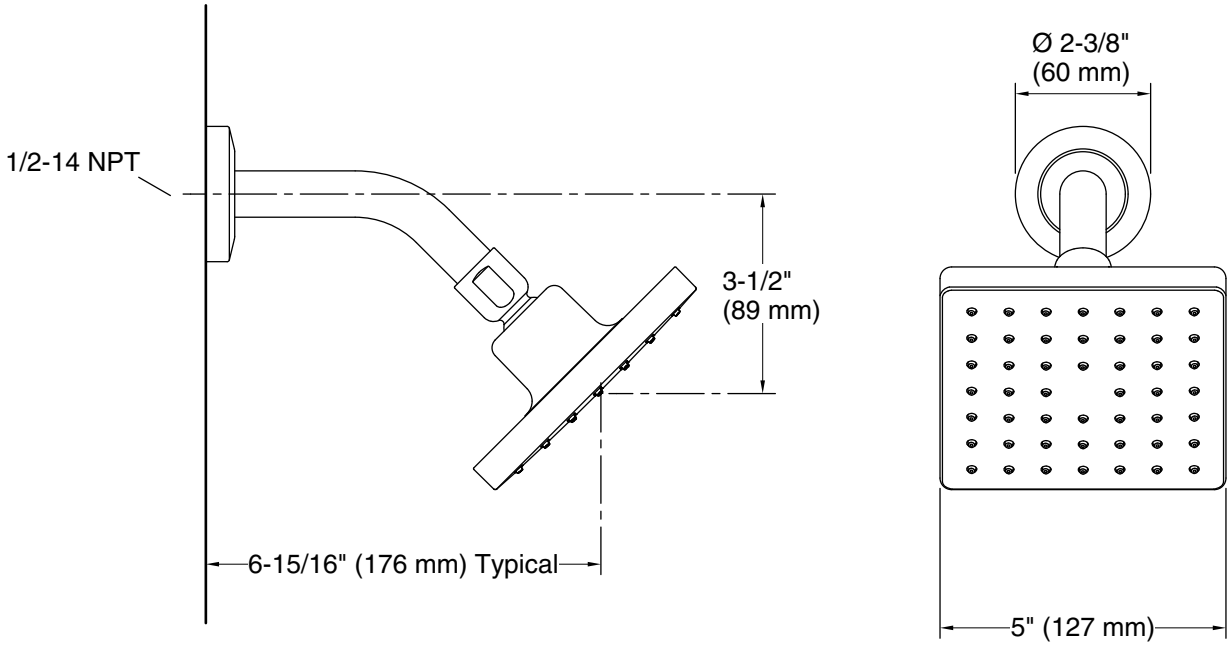

Technical Information

All product dimensions are nominal.

Notes

Install this product according to the installation instructions.