KALLISTA

Bezel™ by CRISTINA Rubinetterie

Bezel™ Volume Control Trim

P33359-00

Features

- High-quality solid-brass construction for durability and reliability
- Faceted knob handle design with precision alignment
- Offers a customizable shower experience
- Required rough-in sold separately

Required Products/Accessories

For wall-mount installation

P32996-00 Volume Control Shower Trim Rough In

Recommended Products/Accessories

P33358-00 Bezel™ Thermostatic Trim
P33360-00 Bezel™ Eco Transfer Trim
P32938-00 Modern Square Showerhead with Arm
P32936-00 Modern Square 11" Raindome

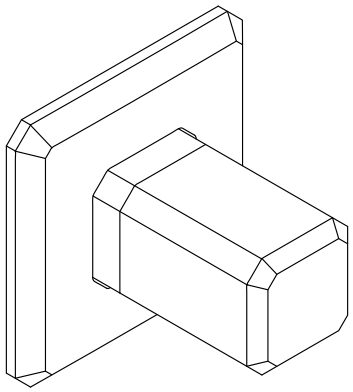

Codes/Standards

ASME A112.18.1/CSA B125.1

KALLISTA® Five-Year Limited Warranty

See website for detailed warranty information.

Available Colors/Finishes

Color tiles intended for reference only.

Color	Code	Description
	CP	Polished Chrome
	BLH	Blush Brass
	BN	Brushed Nickel
	BGP	Brushed Graphite
	PGP	Polished Graphite
	2MB	Brushed Moderne Brass

KALLISTA

Bezel™ by CRISTINA Rubinetterie

Bezel™ Volume Control Trim

P33359-00

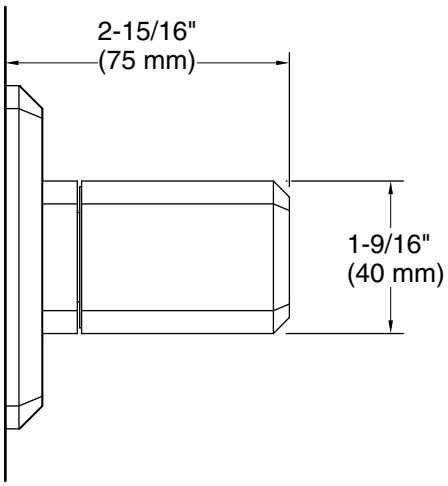

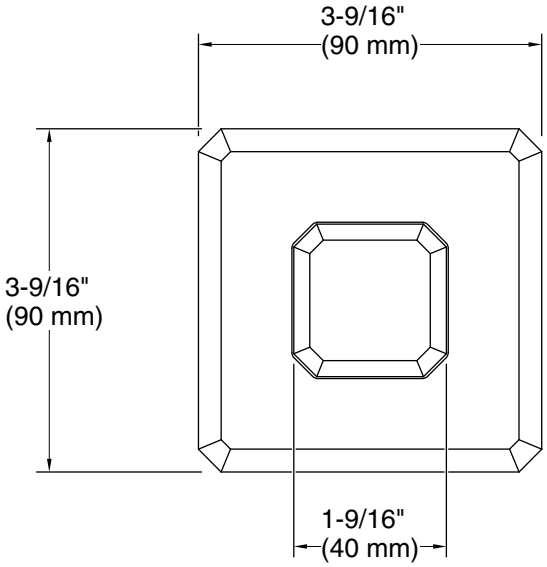

Technical Information

All product dimensions are nominal.

Drain included: No

Notes

Install this product according to the installation instructions.