KALLISTA®

Pinna Paletta® by Laura Kirar
Sink Faucet, Tall Spout, Lever Handles
P24900-SNW

Features
- High-quality solid-brass construction for durability and reliability
- Widespread sink faucet for 8" – 16" (203 – 406 mm) centers
- 1.2 gpm (4.5 lpm) maximum flow rate
- Spout reach is 5-1/2" (140 mm)
- Includes drain and lift rod
- Laminar flow

Recommended Products/Accessories
P24910-SNW Wall-Mount Sink Faucet, Lever Handles
P24933-SNW Towel Bar, 18"
P24936-SNW Hook



ADA | **CSA B651** | **OBC**

Codes/Standards
ASME A112.18.1/CSA B125.1
NSF/ANSI/CAN 61
NSF/ANSI/CAN 372

KALLISTA® Five-Year Limited Warranty
See website for detailed warranty information.

Available Colors/Finishes
Color tiles intended for reference only.

Color	Code	Description
	SN	Polished Nickel

KALLISTA®

Pinna Paletta® by Laura Kirar

Sink Faucet, Tall Spout, Lever Handles

P24900-SNW

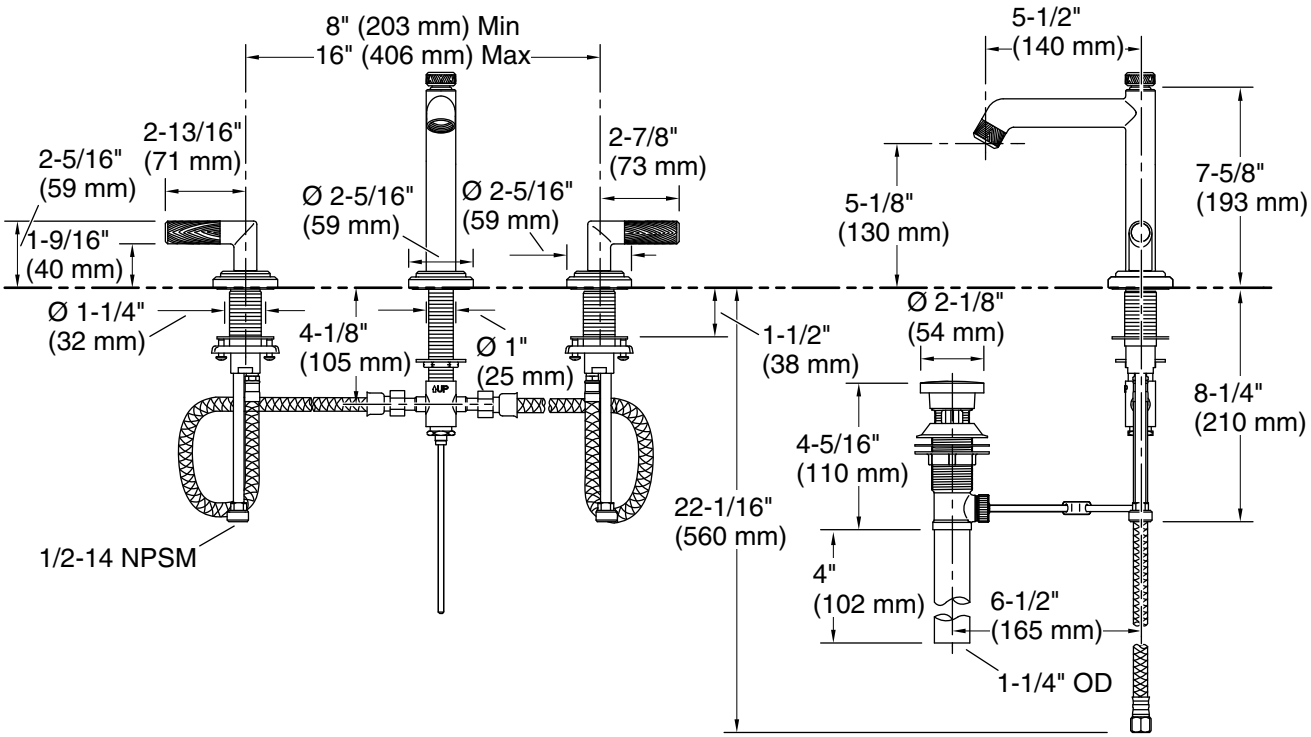

Technical Information

All product dimensions are nominal.

Faucet flow rate:	1.2 gal/min (4.5 l/min)
Drain included:	Yes
Drain with overflow:	Yes

Spout:

Spout reach:	5-1/2" (139 mm)

Notes

Install this product according to the installation instructions.

ADA, OBC, CSA B651 compliant when installed to the specific requirements of these regulations.