KALLISTA®

Per Se® by KALLISTA
Sink Faucet, Low Spout, Lever Handles
P24700-LV

Features
- A selection of products within this collection is in stock and ready to ship. Please visit kallista.com/readytoship for the complete list of Ready-to-Ship products and finishes
- High-quality solid metal construction for durability and reliability
- Widespread sink faucet for 8" – 16" (203 – 406 mm) centers
- 1.2 gpm (4.5 lpm) maximum flow rate
- Spout reach is 5-11/16" (144 mm)
- Includes soft-touch drain
- Laminar flow
- Lift rod option available for projects

Recommended Products/Accessories
K-23723 Faucet cleaner
P74234-WO Under-mount Sink, Soft Rectangle with Overflow, Glazed
P24705-CC Sink faucet, low spout, clear crystal knob handles
P34700-00 Towel Bar, 24"
P34706-00 Hook



WaterSense Meets EPA Criteria Certified by IAPMO R&T

ADA | **CSA B651** | **OBC**

Codes/Standards
ASME A112.18.1/CSA B125.1
NSF/ANSI/CAN 61
NSF/ANSI/CAN 372

KALLISTA® Five-Year Limited Warranty
See website for detailed warranty information.

Available Colors/Finishes
Color tiles intended for reference only.

Color	Code	Description
	CP	Polished Chrome
	W7	Black Nickel
	AF	French Gold
	BAF	Brushed French Gold
	BN	Brushed Nickel
	SN	Polished Nickel

KALLISTA

Per Se® by KALLISTA

Sink Faucet, Low Spout, Lever Handles

P24700-LV

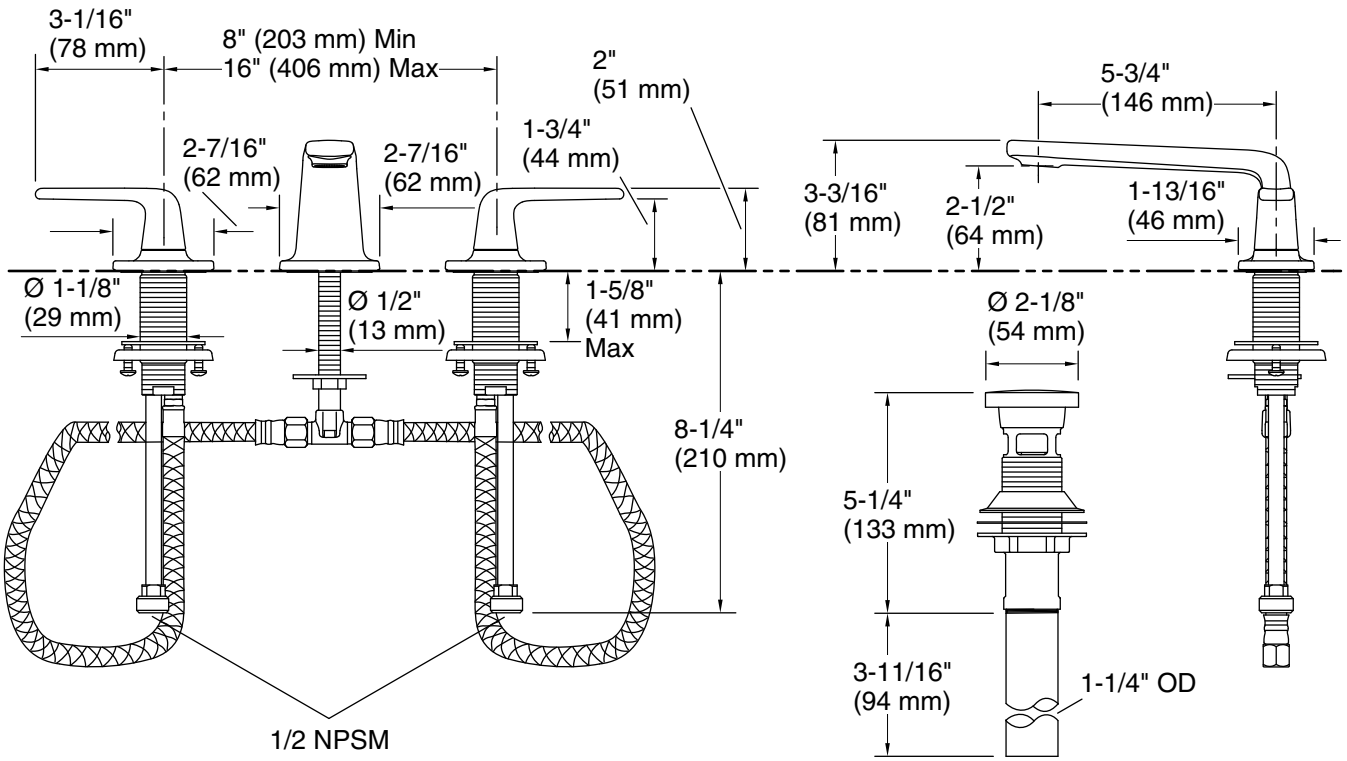

Technical Information

All product dimensions are nominal.

Faucet flow rate:	1.2 gal/min (4.5 l/min)
Drain included:	Yes
Drain with overflow:	Yes

Spout:

Spout reach:	5-11/16" (145 mm)

Pressure/fixture Supply Requirements

Min flow rate:	1.2 gpm (4.5 lpm)

Notes

Install this product according to the installation instructions.

ADA, OBC, CSA B651 compliant when installed to the specific requirements of these regulations.