KALLISTA

One™ by KALLISTA

Sink faucet, gooseneck spout, Nero Marquina handles

P24490-NM

Features

- High-quality solid-brass construction for durability and reliability
- Widespread sink faucet for 8" – 16" (203 – 406 mm) centers
- Spout reach is 6-1/2" (165 mm)
- Laminar flow
- Includes soft-touch drain
- 1.2 gpm (4.5 lpm) maximum flow rate



ADA | **CSA B651** | **OBC**

Codes/Standards

ASME A112.18.1/CSA B125.1
NSF/ANSI/CAN 61
NSF/ANSI/CAN 372

KALLISTA® Five-Year Limited Warranty

See website for detailed warranty information.

Available Colors/Finishes

Color tiles intended for reference only.

Color	Code	Description
	CP	Polished Chrome
	BL	Matte Black
	ULB	Unlacquered Brass
	BAF	Brushed French Gold
	BGP	Brushed Graphite
	BN	Brushed Nickel
	PGP	Polished Graphite
	SN	Polished Nickel
	2MB	Brushed Moderne Brass

KALLISTA

One™ by KALLISTA

Sink faucet, gooseneck spout, Nero Marquina handles

P24490-NM

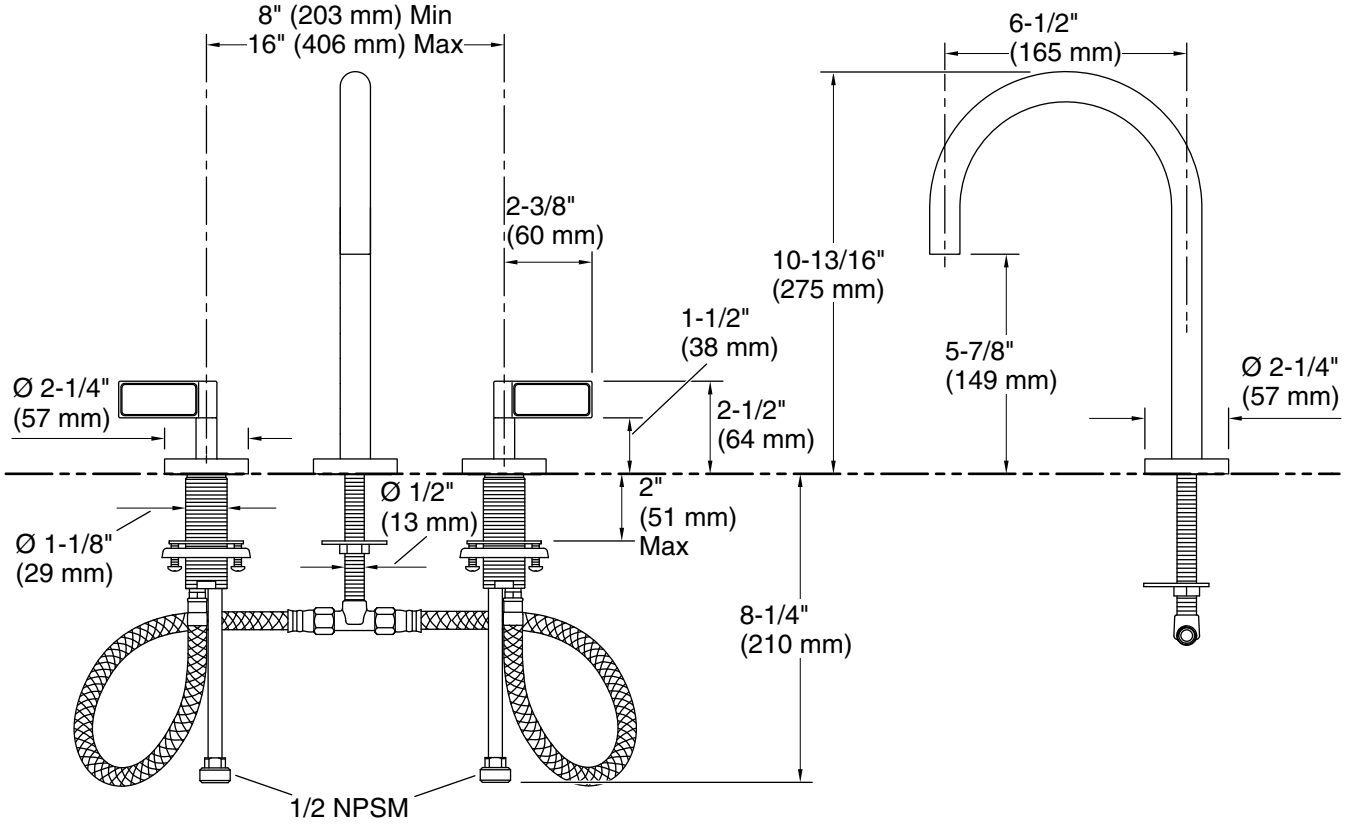

Technical Information

All product dimensions are nominal.

Faucet flow rate:	1.2 gal/min (4.5 l/min)
Drain included:	Yes
Drain with overflow:	Yes

Spout:

Spout reach:	6-1/2" (165 mm)

Notes

ADA, OBC, CSA B651 compliant when installed to the specific requirements of these regulations.