KALLISTA

One™ Nazaré® by KALLISTA

Sink faucet, gooseneck spout, lever handles

P23348-LV

Features

- Product available for Multi-Unit and Hospitality projects only with 5 unit minimum per item per order. Please contact KALLISTA customer service at projectconcierge@kallista.com or (888-452-5547) for additional information
- High-quality solid-brass construction for durability and reliability
- Widespread sink faucet for 8" – 16" (203 – 406 mm) centers
- 1.2 gpm (4.5 lpm) maximum flow rate
- Spout reach is 6-1/2" (165 mm)
- Includes soft-touch drain
- Laminar flow

Recommended Products/Accessories

P74234-WO Under-mount Sink, Soft Rectangle with Overflow, Glazed
P23347-LV Wall-Mount Sink Faucet, Lever Handles
P34402-00 Towel Bar, 18"
P34407-00 Disc Hook



ADA | **CSA B651** | **OBC**

Codes/Standards

ASME A112.18.1/CSA B125.1
NSF/ANSI/CAN 61
NSF/ANSI/CAN 372

KALLISTA® Five-Year Limited Warranty

See website for detailed warranty information.

Available Colors/Finishes

Color tiles intended for reference only.

Color	Code	Description
	CP	Polished Chrome
	BAF	Brushed French Gold
	SN	Polished Nickel
	2MB	Brushed Moderne Brass

KALLISTA

One™ Nazaré® by KALLISTA

Sink faucet, gooseneck spout, lever handles

P23348-LV

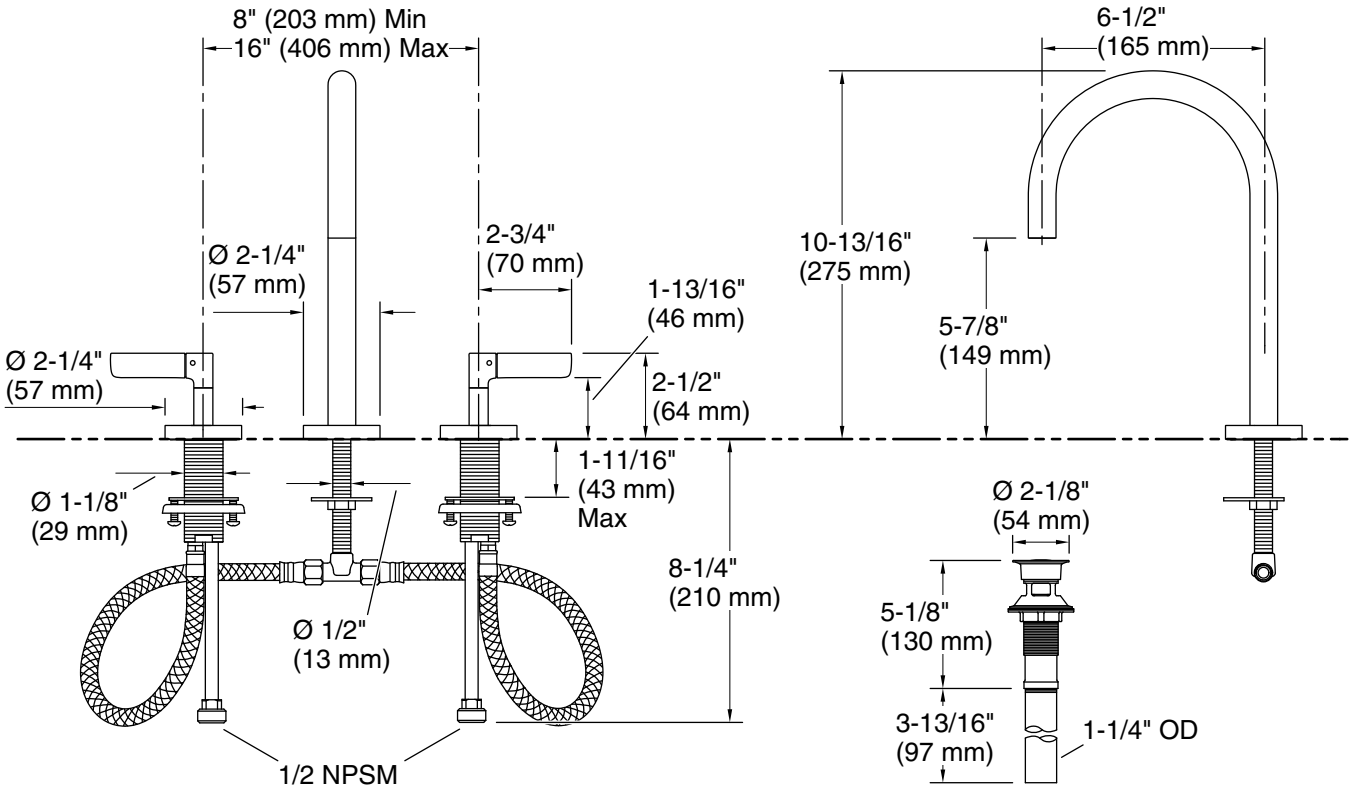

Technical Information

All product dimensions are nominal.

Faucet flow rate:	1.2 gal/min (4.5 l/min)
Drain included:	Yes
Drain with overflow:	Yes

Spout:

Spout reach:	6-1/2" (165 mm)

Pressure/fixture Supply Requirements

Min flow rate:	1.2 gpm (4.5 lpm)

Notes

ADA, OBC, CSA B651 compliant when installed to the specific requirements of these regulations.